Finned Heaters and Heating Batteries

MODEL Z.75 (REDAR / LOVAR)

Wilmod
heating & systems

Model Z.75
type REDAR / LOVAR

Items description

Tubular finned heaters are projected to allow air flow/ gas flow heating in several applications.
Normally this type of heater is mounted in forced ventilation air duct (direct heating / blow by heating)). It is also possible use them when is necessary to heat static gases.

Typical examples of application

- Air heating/conditioning
- Both static and ventilated Drying oven
- Packaging machinery
- Forced ventilation Heating batteries

Materials:

- External sheet: carbon steel (lovar) or stainless steel (redar)
- Fin with helical pitch made of carbon steel (lovar) o stainless steel (redar)
- Resistive wire : NiCr 80/20 alloy
- Electric insulation: high temperature magnesium oxide
- Threaded pins: thread made of carbon steel (LOVAR) or stainless steel (redar)
- Insulating bushings: steatite
- Screw nut/washer: brass

Tests

We make dimensional and electric tests during the whole working schedule according to ISO 9001.2000.
Su ogni singolo pezzo vengono eseguite le seguenti verifiche :

- Dimensional control
- Insulation resistance value
- Dielectric strenght test
- Resistive value tests

Conformations

Straight/ U-shaped/ M shaped

For further information please contact our technical dept.

We reserve the right to change technical details.

Please follow the installation and storage instruction (see page 9).

How to order

Model Z.75

Application: .....
+ Item number (if know): .....
+ Element Diameter : .....
+ Finned diameter: .....
+ Length: .....
+ Power: .....
+ Tension: .....
+ Bushings: .....
+ Fixing plate: .....
+ Quantity: .....

info@wilmod.nl
www.wilmod.nl

Amethistweg 39 \ 2665 NT Bleiswijk
T +31 79 346 19 19

info@kuwatec.nl
www.kuwatec.nl

Wilmod heating & systems

Model Z.75
type REDAR
(stainless steel)

Standard items available in stock

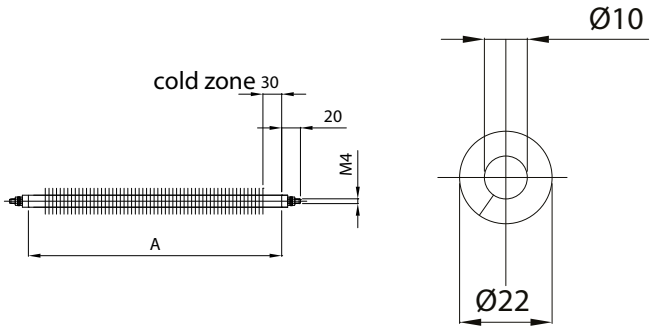

Air / gas flow > 8m/s			
8,5W/cm² 230 V			
Watt [W]	A [mm]	Code	Weight [Kg]
500	260	26.61.01	0,180
700	340	26.61.02	0,230
800	380	26.61.03	0,260
1000	460	26.61.04	0,310
1200	540	26.61.05	0,370
1300	580	26.61.06	0,390
1500	660	26.61.07	0,450
1800	780	26.61.08	0,530
2000	860	26.61.09	0,580
2500	1060	26.61.10	0,720

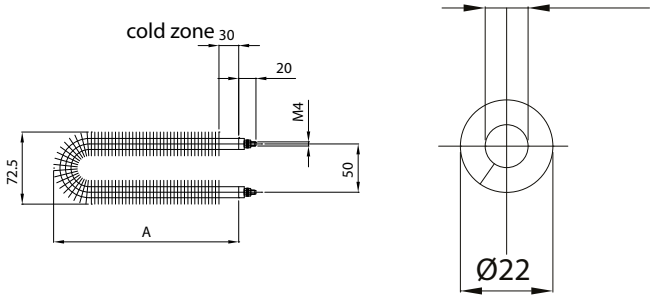

Air / gas flow > 8m/s			
8,5W/cm² 230 V			
Watt [W]	A [mm]	Code	Weight [Kg]
500	125	26.61.20	0,180
700	165	26.61.21	0,230
800	185	26.61.22	0,260
1000	225	26.61.23	0,310
1200	265	26.61.24	0,370
1300	285	26.61.25	0,390
1500	325	26.61.26	0,450
1800	385	26.61.27	0,530
2000	425	26.61.28	0,580
2500	525	26.61.29	0,720
3000	625	26.61.30	0,850

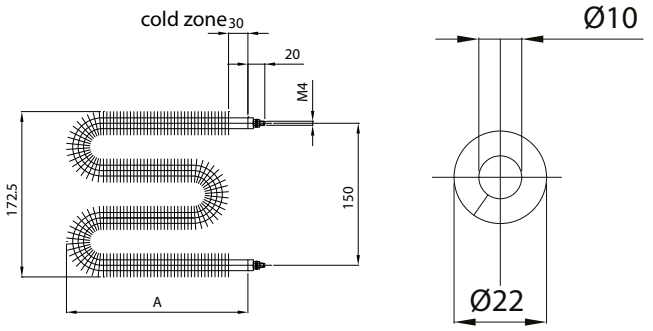

Air / gas flow > 8m/s			
8,5W/cm² 230 V			
Watt [W]	A [mm]	Code	Weight [Kg]
800	105	26.61.41	0,260
1000	125	26.61.42	0,310
1200	145	26.61.43	0,370
1300	155	26.61.44	0,390
1500	175	26.61.45	0,450
1800	205	26.61.46	0,530
2000	225	26.61.47	0,580
2500	275	26.61.48	0,720
3000	325	26.61.49	0,850

info@wilmod.nl
www.wilmod.nl
Amethistweg 39 \ 2665 NT Bleiswijk
T +31 79 346 19 19
info@kuwatec.nl
www.kuwatec.nl

System for the finned heater assembly tipe REDAR

In order to connect the heaters on the retaining structure we may supply them together with threaded bushings or fixing plate.

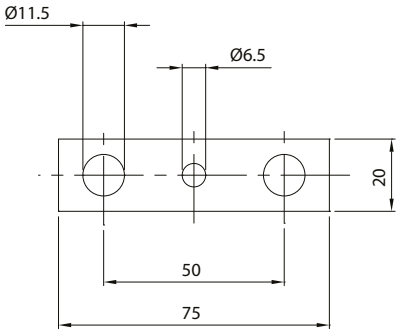

Simplex plate for the simple assembly of U shaped heaters

(already sealed on the heater upon request)

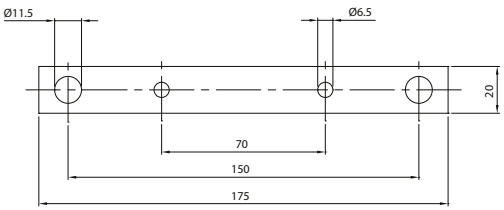

Simplex plate for the simple assembly of M shaped heaters

(already sealed on the heater upon request)

Crimped bushings (zinc coated stainless steel)

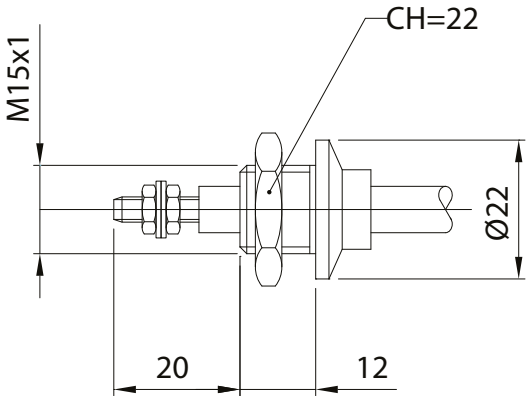

Othet types upon request.

info@wilmod.nl
www.wilmod.nl
Amethistweg 39 \ 2665 NT Bleiswijk
T +31 79 346 19 19
info@kuwatec.nl
www.kuwatec.nl

Model Z.75
type LOVAR (carbon steel)

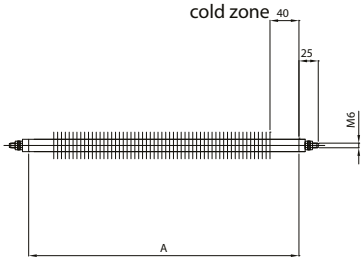

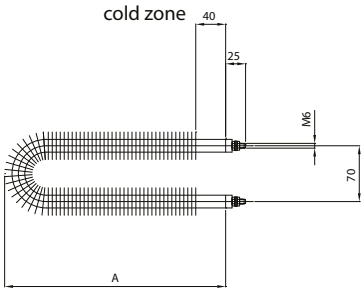

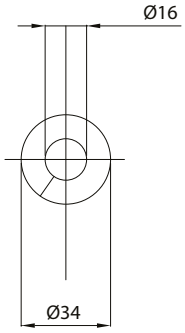

Standard items available in stock

2 W/cm² 230 V			
Watt [W]	A [mm]	Code	Weight [Kg]
500	550	23.51.02	0,900
700	750	23.51.03	1,230
800	850	23.51.04	1,300
1000	1050	23.51.05	1720
1200	1250	23.51.06	2,050
1300	1350	23.51.07	2,210
1500	1550	23.51.08	2,530
1800	1850	23.51.09	3,030
2000	2050	23.51.10	3,350
2500	2550	23.51.11	4,170
3000	3050	23.51.12	4,990

2 W/cm² 230 V			
Watt [W]	A [mm]	Code	Weight [Kg]
500	275	23.51.21	0,900
700	375	23.51.22	1,230
800	425	23.51.23	1,300
1000	525	23.51.24	1720
1200	625	23.51.25	2,050
1300	675	23.51.26	2,210
1500	775	26.51.27	2,530
1800	925	23.51.28	3,030
2000	1025	23.51.29	3,350
2500	1275	23.51.30	4,170
3000	1525	23.51.31	4,990

Specific load 2 W/cm²

Suitable for heating a slow heat exchange gas at natural convention with a hight store of heat (450° C).

- Static ddryers
- Heating of premises
- Ovens
- Critical atmospheres
- Incubators

3 W/cm² 230 V			
Watt [W]	A [mm]	Code	Weight [Kg]
500	400	24.51.01	0,650
700	500	24.51.02	0,820
800	600	24.51.03	0,980
1000	700	24.51.04	1,150
1200	850	24.51.05	1,400
1300	900	24.51.06	1,470
1500	1050	24.51.07	1,720
1800	1250	24.51.08	2,050
2000	1400	24.51.09	2,290
2500	1700	24.51.10	2,780
3000	2050	24.51.11	3,350
3500	2350	24.51.12	3,840

3 W/cm² 230 V			
Watt [W]	A [mm]	Code	Weight [Kg]
700	250	24.51.21	0,820
800	300	24.51.22	0,980
1000	350	24.51.23	1,150
1200	425	24.51.24	1,400
1300	450	24.51.25	1,470
1500	525	24.51.26	1,720
1800	625	24.51.27	2,050
2000	700	24.51.28	2,290
2500	850	24.51.29	2,780
3000	1025	24.51.30	3,350
3500	1175	24.51.31	3,840

Specific load 3 W/cm²

Suitable for heating gas inside low heat exchage ducts, also at natural convention with limited store of heat (250° C).

- Airly ddryers
- Heating of premises
- Domestic stoves
- Middle wattage batteries
- Forced passage<3 m/s

info@wilmod.nl
www.wilmod.nl
Amethistweg 39 \ 2665 NT Bleiswijk
T +31 79 346 19 19
info@kuwatec.nl
www.kuwatec.nl
Wilmod heating & systems

Luchtverwarming ZRE

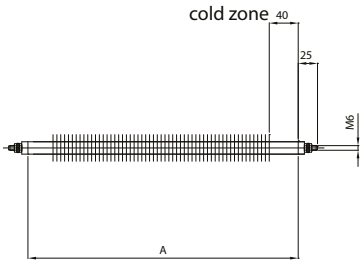

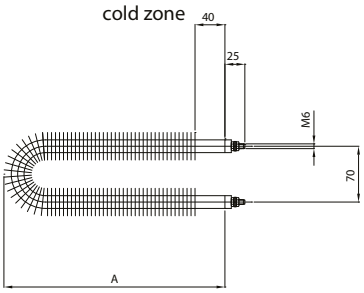

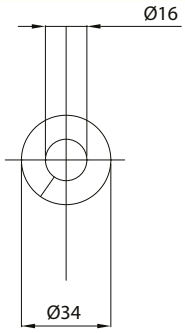

Standard items available in stock

4 W/cm² 230 V			
Watt [W]	A [mm]	Code	Weight [Kg]
700	400	25.51.01	0,650
800	450	25.51.02	0,740
1000	550	25.51.03	0,900
1200	650	25.51.04	1,060
1300	700	25.51.05	1,150
1500	800	25.51.06	1,310
1800	950	25.51.07	1,550
2000	1050	25.51.08	1,720
2500	1300	25.51.09	2,130
3000	1550	25.51.10	2,530
3500	1800	25.51.11	2,940
4000	2050	25.51.12	3,350

4 W/cm² 230 V			
Watt [W]	A [mm]	Code	Weight [Kg]
800	225	25.51.20	0,740
1000	275	25.51.21	0,900
1200	325	25.51.22	1,060
1300	350	25.51.23	1,150
1500	400	25.51.24	1,310
1800	475	25.51.25	1,550
2000	525	25.51.26	1,720
2500	650	25.51.27	2,130
3000	775	25.51.28	2,530
3500	900	25.51.29	2,940
4000	1025	25.51.30	3,350

Specific load 4 W/cm²

Suitable for heating gas inside foced ducts.

- Termoventilators
- Industrial batteries
- Hight heat exchage plants
- Forced passage <3 m/s

System for the finned heater assembly tipe LOVAR

Seamed sleeve

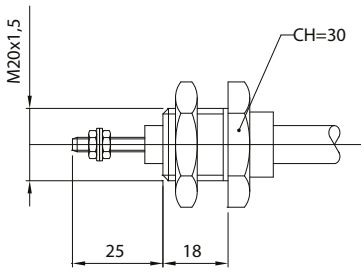

Simplex plate

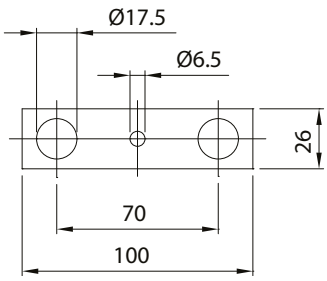

For the simple assembly of U-heaters (upon request, welded on the heaters)

info@wilmod.nl
www.wilmod.nl

Amethistweg 39 \ 2665 NT Bleiswijk
T +31 79 346 19 19

info@kuwatec.nl
www.kuwatec.nl

Heating batteries

Technical features

In addition to simple finned heaters we may also supply the same heaters mounted on heating batteries ready to be used.
In case of order, please pinpoint the following characteristics:

- In case the fluid is not air, please let us know specific weight and specific heat capacity of the gaseous mixture
- Flow rate
- T°1 (°C)
- T°2 (°C)
- Feeding tension (V)
- Stage
- Any safety device (thermostat, thermo-couple..)
- Type of execution: internal heating batteries or plug in heating batteries
- Conduct section
- Connection IP
- Frame material
- Overall power

For further information please contact our technical dept.

We reserve the right to change technical details.

Please follow the installation and storage instruction (see page 9).

info@wilmod.nl
www.wilmod.nl

Amethistweg 39 \ 2665 NT Bleiswijk
T +31 79 346 19 19

info@kuwatec.nl
www.kuwatec.nl

Wilmod heating & systems

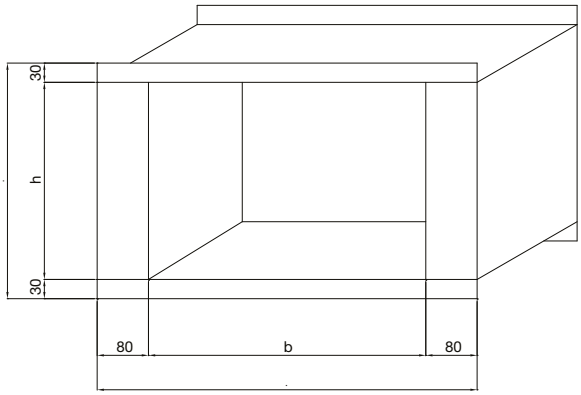

Standard frame dimension

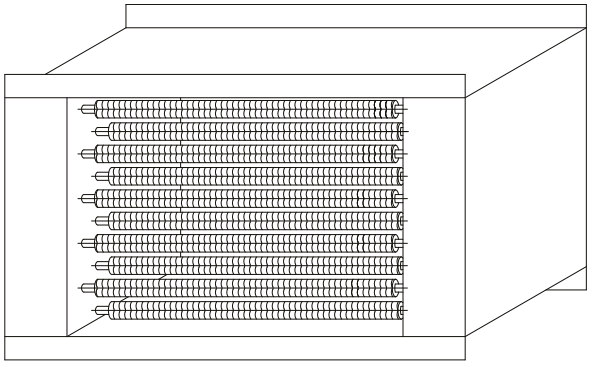

“Double head” internal heating batteries

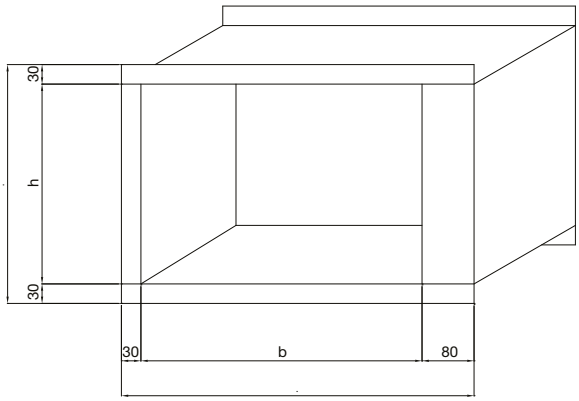

Standard frame dimension

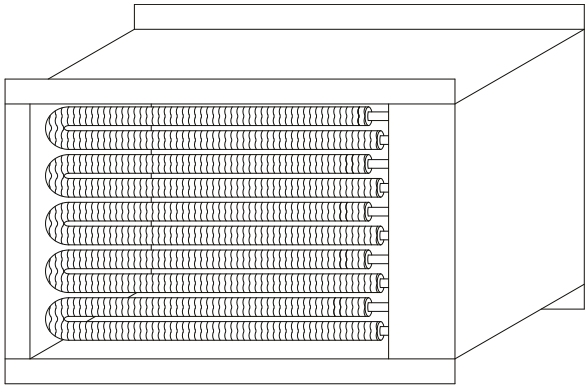

Internal heating batteries

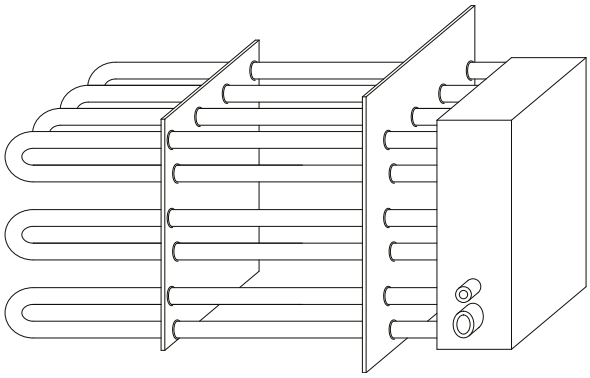

“Cold Flange” plug-in heating batteries

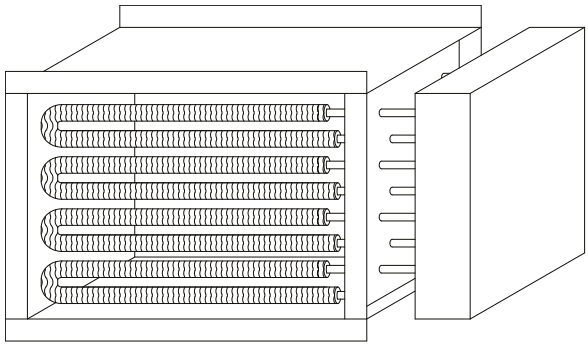

“Cold Flange” internal heating batteries

info@wilmod.nl
www.wilmod.nl

Amethistweg 39 \ 2665 NT Bleiswijk
T +31 79 346 19 19

info@kuwatec.nl
www.kuwatec.nl

Wilmod
heating & systems

Installation and storage instruction

Installation

- In order to connect the heaters on the retaining structure we may supply them together with threaded bushings or fixing plate (only for U-shaped and M-shaped heaters).
  Please check on the previous pages the fixing device available for each item.
  In the presence of gasket please verify their capacity to reach the max. working temperature/pressure the device will reach.
  After using the heater at the working temperature few hours please check the tightening of the threaded parts.

Store

- Store at room temperature in a dry place.

Operation

- Security procedures for the the handling of electrical items and application must be followed
  Do not touch the heater while in use because it can get very hot
  Please make sure that the hea ting elements can not touch flammable material while in use.

Temperature controllers

- Temperature controllers have to match the power consumption and the used temperature.

Electric connection

- Please, stick to the nameplate features (specially regarding feeding voltage and power).
  Please, use connection leads suitable for the environment in
  which they are used.

Beware

- This kind of heaters contains magnesium oxide –an insu lating and highly hygroscopic material. That is why if laid in a damp environment a bit long, the humidity tend to accumulate / gather inside the heaters causing insulation resistance decreasing with consequent intervention of safety device.
- In case of long term storage is expedient before to use the heaters to check the insulation resistance with an insulation tester applying it between the phase and the earth: while using a tension not less than 500V the revealed insulation resistance value has to be equal or superior to 5 Megaohm. In case the checked value is lower a drying up will be neces sary putting the heaters in a oven at a temperature between 100° and 130°C till the insulation value will be restored (nor mally about 10/12 hours).

info@wilmod.nl
www.wilmod.nl
Amethistweg 39 \ 2665 NT Bleiswijk
T +31 79 346 19 19
info@kuwatec.nl
www.kuwatec.nl
Wilmod heating & systems